FUEL SYSTEM, EVAP - Z26SPD92AN/AH/BN/BH (C750511)

2026 RZR - RZR PRO S ULTIMATE (R01) - Z26SPD92AN/AH/BN/BH

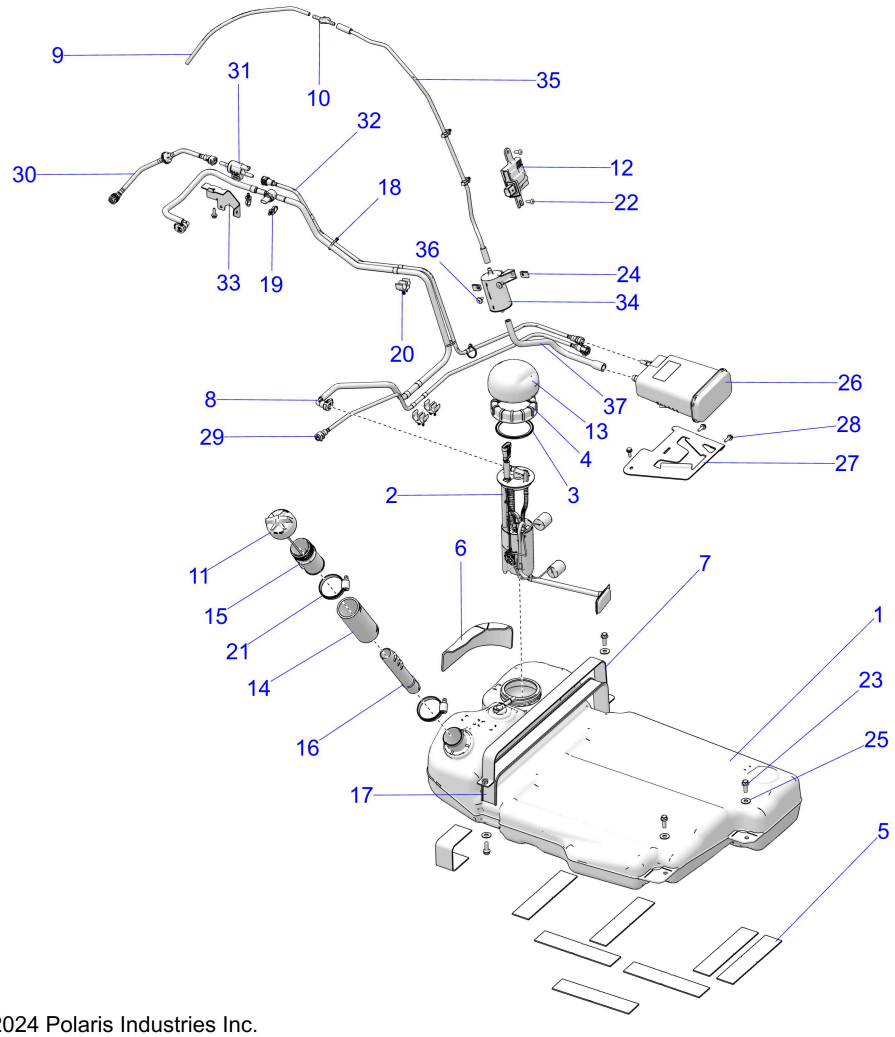

© 2024 Polaris Industries Inc. C750511

Reference #	*Part#*	*Description*	*Quantity*
1	2640243	ASM-FUEL TANK,RZR,T [INCL. 2-6][TO 1.23.2026]	1
1	2638042	ASM-FUEL TANK,RZR,12 GAL [INCL. 2-6][FROM 1.23.2026]	1
2	2211788	K-FUEL PUMP [INCL. 3 & 4][TO 1.23.2026]	1
2	2211924	K-FUEL PUMP [FROM 1.23.2026]	1
3	5413451	GASKET-PFA,RIBBED	1
4	5437138	NUT-MASON JAR	1
5	5814781	PAD-TANK,MOUNT	8
6	5814906	SHIELD-FUEL TANK	1
7	1027697-329	BRKT-STRAP,FUEL TANK,ECOAT	1
8	2522365	ASM-FUEL LINE,SUPPLY	1
9	2522401	ASM-LINE,VENT TERM	1
10	5457446	FITTING-VENT LINE,35	1
11	2522651	CAP-GAS TANK,TETHER	1
12	2522698	ASM-FUEL PUMP,CONTROL,MODULE [TO 2.2.2026]	1
12	2523111	ASM-FUEL PUMP,CONTROL,MODULE [FROM 2.2.2026]	1
13	2522746	COVER-PFA,WALBRO [TO 1.23.2026]	1
13	2522805	COVER-PFA,VIPER [FROM 1.23.2026]	1
14	5414709	HOSE, FUEL FILL	1

15	5455329	NECK-FUEL FILL,OUTER	1
16	5466555	TUBE-FUEL FILL,INNER	1
17	5522265	PAD-STRAP,RUBBER	1
18	7080761	CABLE-TIE,10-102MM,WEATH.-RES.	3
19	7081496	CLIP FIR-TREE,DIA6-33MM	4
20	7082454	CLIP-DOUBLE	3
21	7083059	CLAMP-HOSE,25-77 DIA,PLASTIC	2
22	7519045	SCR-TX TRUSS-#14X3/4, HI/LO ZBK	2
23	7519243	SCR-HXFL-M8X1.25X25 8.8 ZODP30	4
24	7547674	NUT-M6-1.0, U-TYPE (2.5-3.8)	2
25	7555976	WASHER-.390X.940X.060,FL-Y	4
26	2521786	CANISTER-ACTIVATED CARBON	1
27	5267375-329	BRKT-MNT CANISTER,BLK	1
28	7518529	SCR-M6X1.0X20,HXHD,FLG,TDFM,BK	4
29	2522079	ASM-LINE,TANK TO CANISTER	2
30	2521959	ASM-LINE,PURGE TO TB	1
31	2521964	VALVE-PURGE	1
32	2522081	ASM-LINE,CANISTER TO PURGE	1
33	5268112-329	BRKT-MNT PURGE VALVE,ECOAT	1
34	2521750	FILTER-CANISTER VENT	1
35	2522430	ASM-LINE,VENT TO CHASSIS	1
36	7518936	SCR-M6X1X16 TR/TX-M	2
37	8450210	HOSE-VENT TO CANISTER	1

Copyright 1996-2026 Polaris Industries U.S.A All rights reserved.